Can-Am™ Commander™

Cleaning Procedure of Exhaust Area

This is an addendum to the Operator's Guide of Can-Am Commander model year 2011, 2012 and 2013 vehicles.
It should be kept with the Operator's Guide in the vehicle.

BRP recommends to clean the exhaust area every 1 500 km (1,000 mi) or 50 hours of operation (whichever comes first).

⚠ WARNING

In order to avoid potential burns, never perform these operations immediately after the engine has been running as exhaust system is very hot. Let vehicle cool down before performing these operations.

NOTE: On following illustrations, some items such as the cage, the side net and seat belt were removed for clarity purposes.

Step 1

Driver's seat

1.1 Remove driver's seat as per Operator's Guide.

Step 2

Lateral console panel on driver's side

2.1 Remove plastic rivets securing the lateral console panel and keep for reinstallation later on.
To know more about how to remove the plastic rivets, please see next page.

2.2 Remove the lateral console panel.

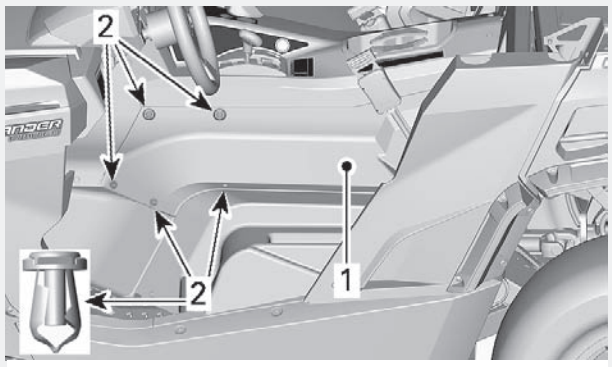

FRONT PORTION OF THE LH LATERAL CONSOLE PANEL
1. LH lateral console panel
2. Plastic rivets

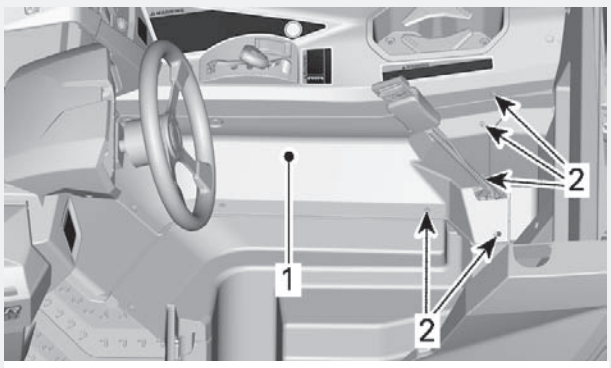

REAR PORTION OF THE LH LATERAL CONSOLE PANEL
1. LH lateral console panel
2. Plastic rivets

Step 3

Under seat storage compartment

3.1 Remove plastic rivets securing the under seat storage compartment and keep for reinstallation later on.

3.2 Remove under seat storage compartment. This part will still be attached to the vehicle by the seat belt.

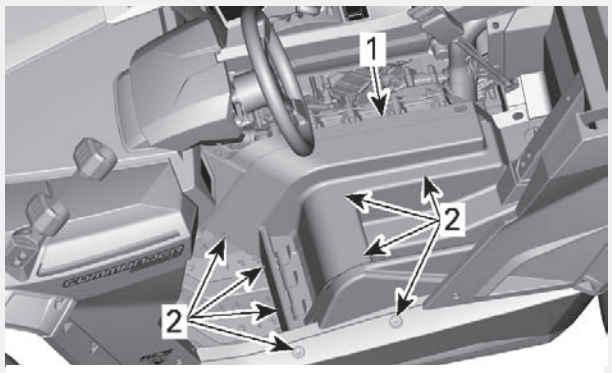

1. Under seat storage compartment
2. Plastic rivets

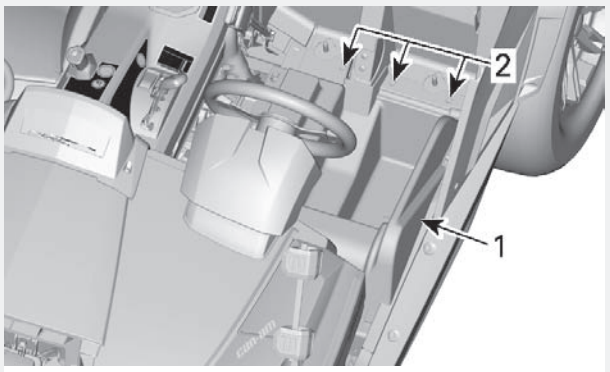

1. Under seat storage compartment
2. Plastic rivets

Step 4

Access to area that may require cleaning

4.1 Wearing gloves, hand remove all excess debris around exhaust.

4.2 Using a garden hose, thoroughly clean the area so no more debris can be in contact with exhaust.

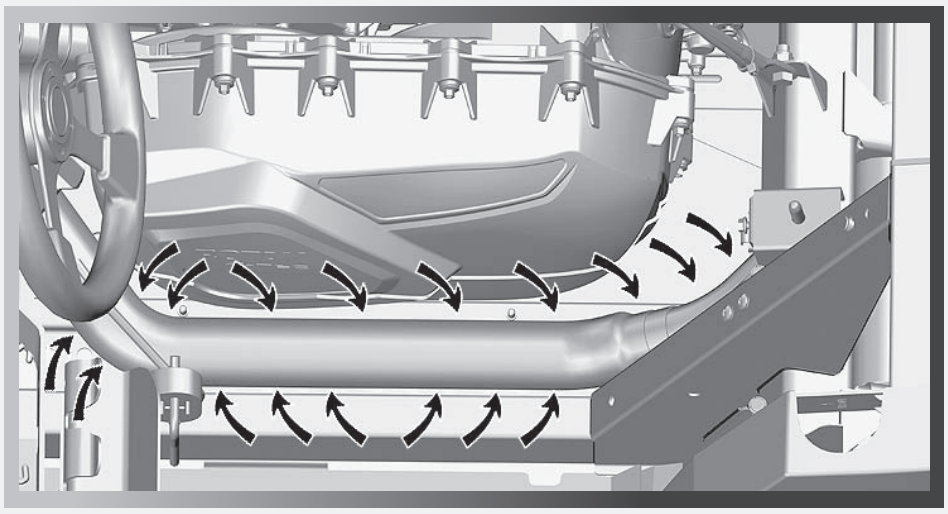

Step 5

Reinstallation of removed parts

5.1 The installation of the previously removed parts is the reverse of the removal procedure.

Supplementary information

How to remove the plastic rivets

1

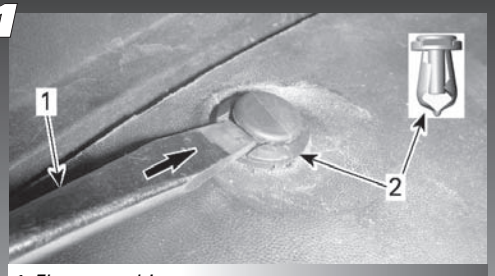

1. Flat screw driver
2. Plastic rivets

2

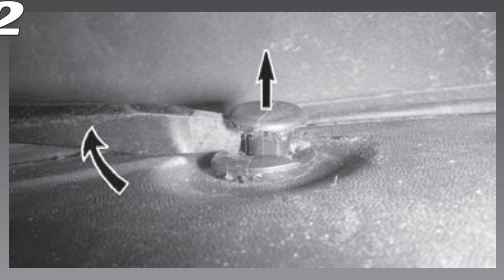

3

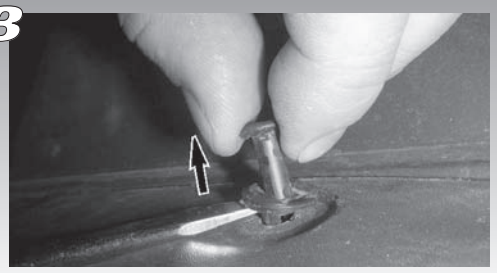

4

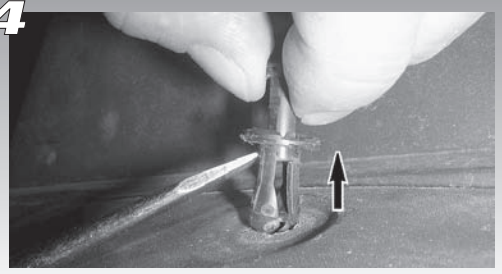

Step 6

Under cargo box cleaning

6.1 Tilt the cargo box and clean the area surrounding the exhaust.

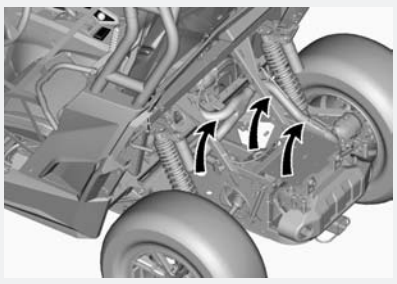

Step 7

For vehicles equipped with the Front Grill Kit

7.1 Make sure that the two grills are clean.

7.2 Make sure that the two grills are still attached properly.

7.3 Make sure that the two grills are in good condition.

For more information, refer to the Safety recall notice letter :

Can-Am Commander - Accumulation of debris in the exhaust area in very specific riding terrains and conditions.

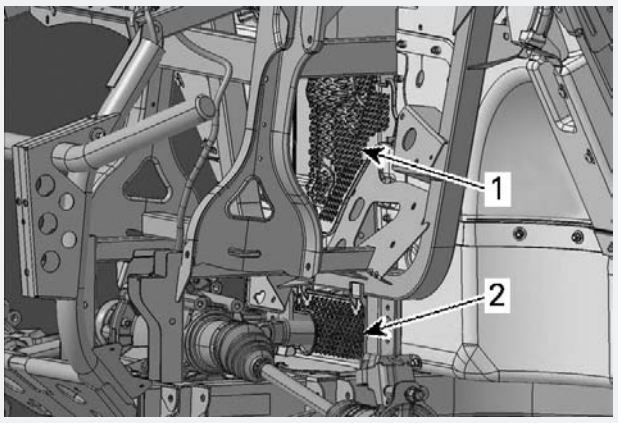

®™ AND THE BRP LOGO ARE TRADEMARKS OF BOMBARDIER RECREATIONAL PRODUCTS INC. OR ITS AFFILIATES.
©2012 BOMBARDIER RECREATIONAL PRODUCTS INC. ALL RIGHTS RESERVED. PRINTED IN CANADA. (TBG2013-002)